軸流ファン Axial Fan Nidec TALENT TOP

95×95×25mm PWM SERIES

＊Material Impeller & Frame：Plastic（UL 94V-0）
＊Lead Wires：UL 1007AWG # 24 or Equivalent
Red Wire Positive (+)　Yellow Wire (FG)
Black Wire Negative (-)　Green Wire (PWM)
＊Impeller：7 Blades
＊Rotational direction CCW view from inlet face
＊Weight：82g（2,89oz）

SPECIFICATION：B：2 Ball Bearings　S：Sleeve
N：Nanometer Bearing F：1B 1S
Frame Type：P：Flange Type（8 holes）
T：Rib Type（4holes）
Other Specially Design Type

型号	轴承	输入电压	电压范围	电流	功率	转速	风量		风压		噪音
PART NO.	B.S.F	VDC	VDC	Amp	Watt	R.P.M	m3/min	CFM	mm Aq	INAq	dB-A
DT1209L	F	12	5~13.8	0.18	2.16	2500	1.45	51.00	3.18	0.129	37.0
DT1209M	F	12	5~13.8	0.42	5.04	3600	2.00	70.10	6.08	0.247	46.5
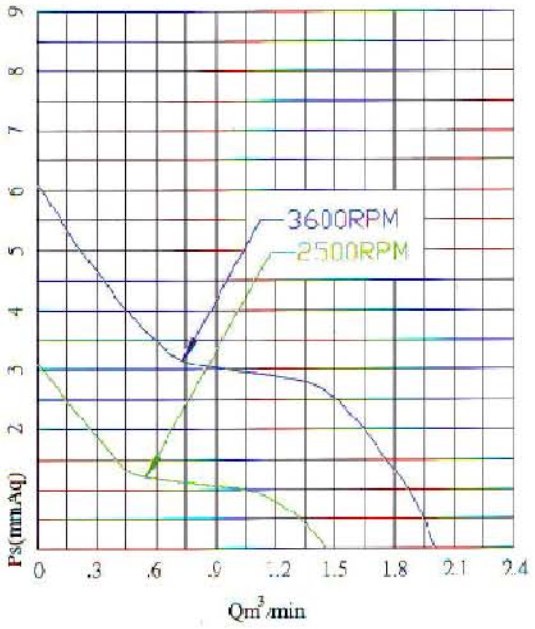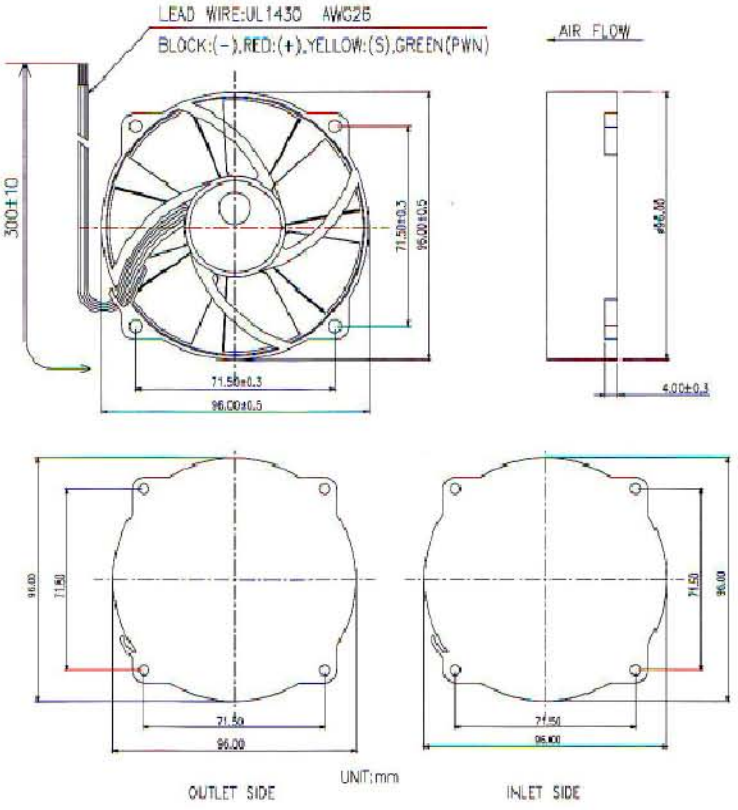
＊Function type is optional
＊The max. air flow and the speed are measured in free air; max Air pressure is measured at zero air flow.
＊Noise is measured in semi anechoic chamber in free air, one meter from intake side.
＊All readings are typical values at rated voltage.
＊Specifications are subject to change without notice.